aeroservice® Equipments

AUTOMOTIVE

Technical data sheet

HOSE REELS

ARHV

Manual rewind hose reel and on-board fan

APPLICATIONS

Localised extraction of exhaust gases from motorbikes, cars, trucks and heavy vehicles.
Wall-mounted or ceiling-mounted in centralised system or with single on-board fan.

FEATURES

An innovative and exclusive rotation system made from “rotamax” aluminium alloy, designed to permit glide and manoeuvrability in the time and conditions of use, even heavy-duty.
Containment guard with greaser for harmonic stainless steel springs, preloaded and pre-calibrated according to the lengths and diameters of the flexible hoses.
Standard structure in reinforced steel for all versions.
Disks and drums are available in 4 different sizes to meet any possible requirements for anti-crush hose diameter and length.
Possible interchanging of solutions and accessories to improve extraction with our EV extraction fans and motorized calibration damper system.
Crush-resistant hose TGA with lengths and diameters available from 75 mm to 150 mm.

CERTIFICATIONS

CE EAC

TECHNICAL DATA

MOD. ARHV	HOSE	HOSE LENGTH	EXTRACTION FAN	POWER	VOLTAGE	TOTAL FLOW RATE	NOISE	TOTAL WEIGHT
	Ø mm	mt	MOD.	kW / HP	VOLT	m^3/h	dBA	Kg
ARHV 75	75	7,5-10-13-15	EV 15	0,55 / 0,75	230/400/50	400	74	67-70
ARHV 100	100	7,5-10-13-15	EV 15	0,55 / 0,75	230/400/50	650	74	68-77
ARHV 125	125	7,5-10-13-15	EV 18	1,1 / 1,5	230/400/50	1000	78	84-96
ARHV 150	150	7,5-10-13-15	EV 18	1,1 / 1,5	230/400/50	1200	78	95-111

DIMENSIONS

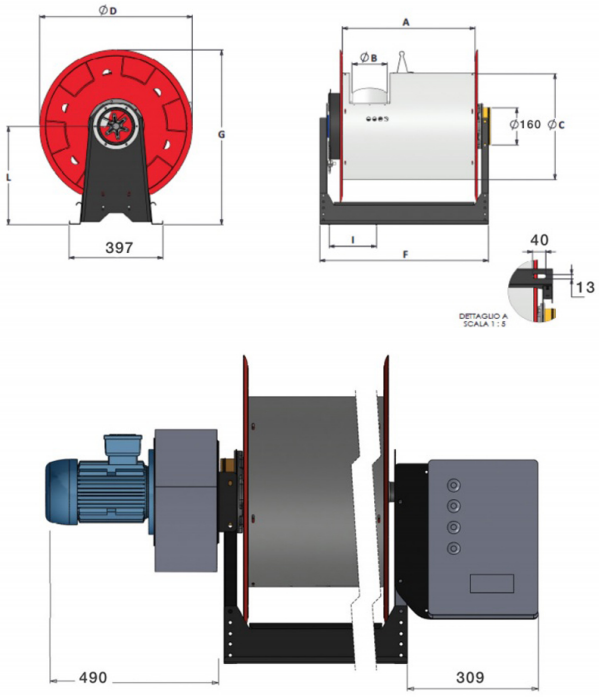

MOD.	A	B	C	D	F	G	I	No. of holes	L
75/7,5	560	75	450	647	713	740	200	4	415
75/10	560	75	450	647	713	740	200	4	415
75/13	720	75	450	647	873	740	265	4	415
100/7,5	560	100	450	647	713	754	200	4	431
100/10	720	100	450	647	873	754	265	4	431
100/13	960	100	450	647	1113	754	258	5	431
125/7,5	720	125	450	647	873	780	265	4	457
125/10	720	125	450	647	873	780	265	4	457
125/13	960	125	450	647	1113	780	258	5	457
150/10	960	150	450	647	1113	805	258	5	483
150/13	1200	150	450	647	1353	805	319	5	483
150/15	1200	150	450	647	1353	805	319	5	483

ACCESSORIES

QUICK COUPLERS

For nozzle release, in impact and temperature resistant plastic

NOZZLES

A complete range for different types of mufflers

KIT AS-CAR

For twin exhaust cars consisting of 2 rubber nozzles, flex hose and "Y" fitting

KIT START-STOP

Complete with micro switch wired to the junction box for automatic start up and shut down of the extraction fan

HOSE KIT

Galvanised sheet metal components to exhaust the extracted fumes

ELECTRICAL PANEL

ON/OFF electric motor start and protection

DAMPERS

Manual or motorized, to be applied to hose or hose reel

SPECIAL BRACKETS

For ceiling/wall or column mounting

EV FAN

High pressure aluminium fans

PACKAGING

VOLUME m^3 1.34 (160X80X105 cm.)

QR CODE

QR CODE